INSTALLATION INSTRUCTION

FAYE SEMI-RECESSED WB

SVW27804810N01 (NM-5782-SC/WT)
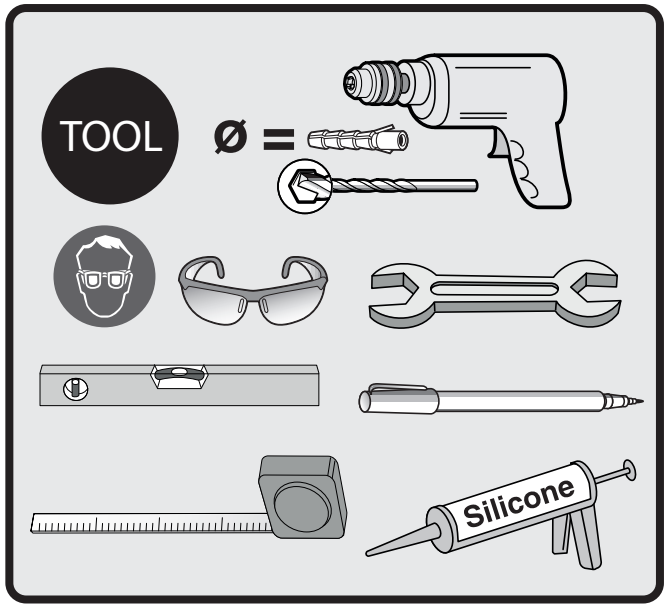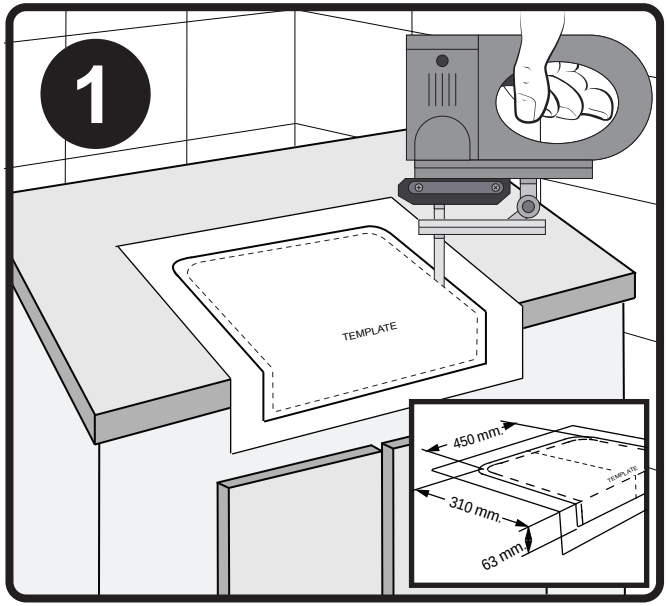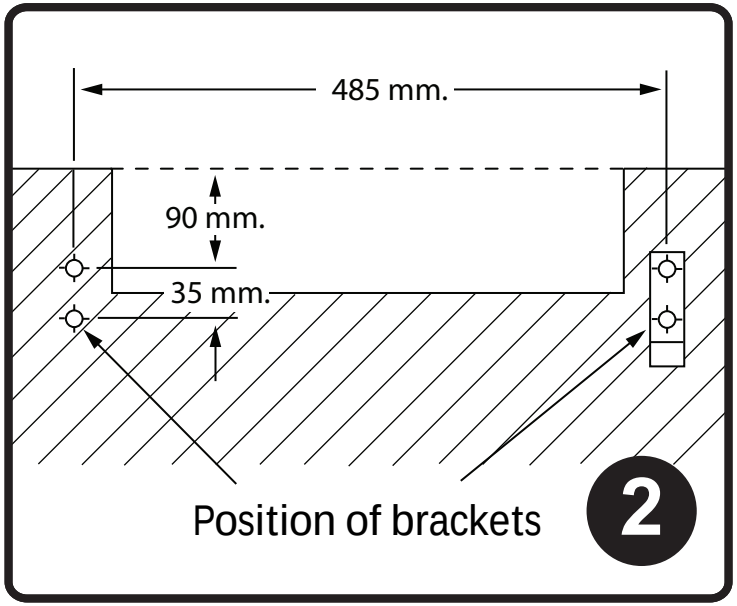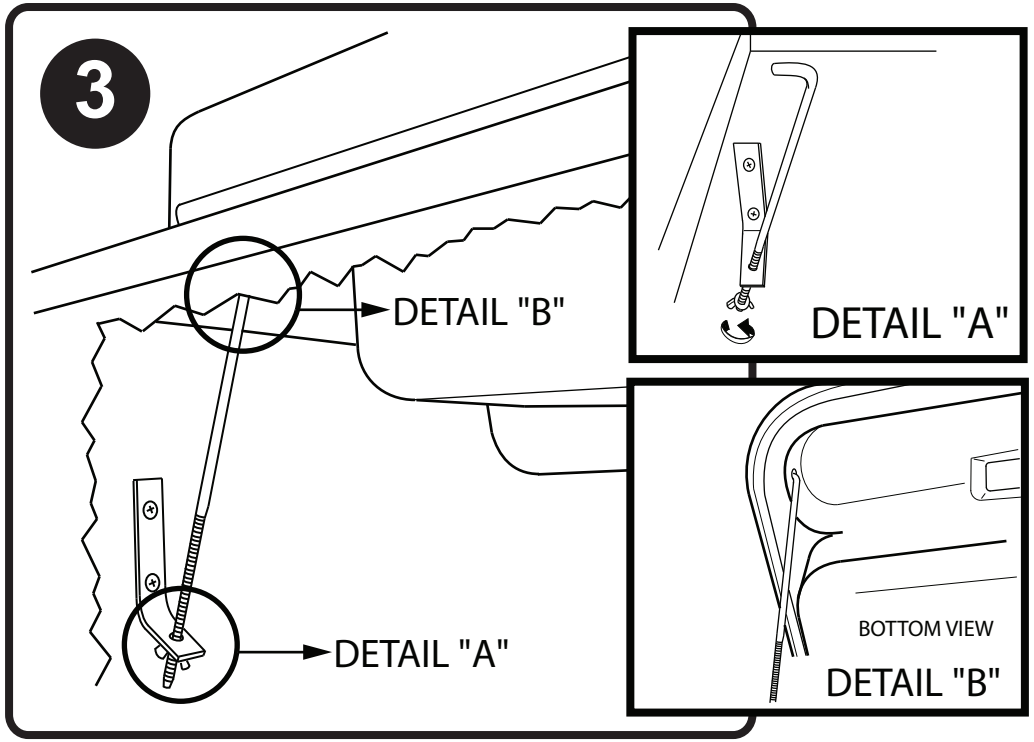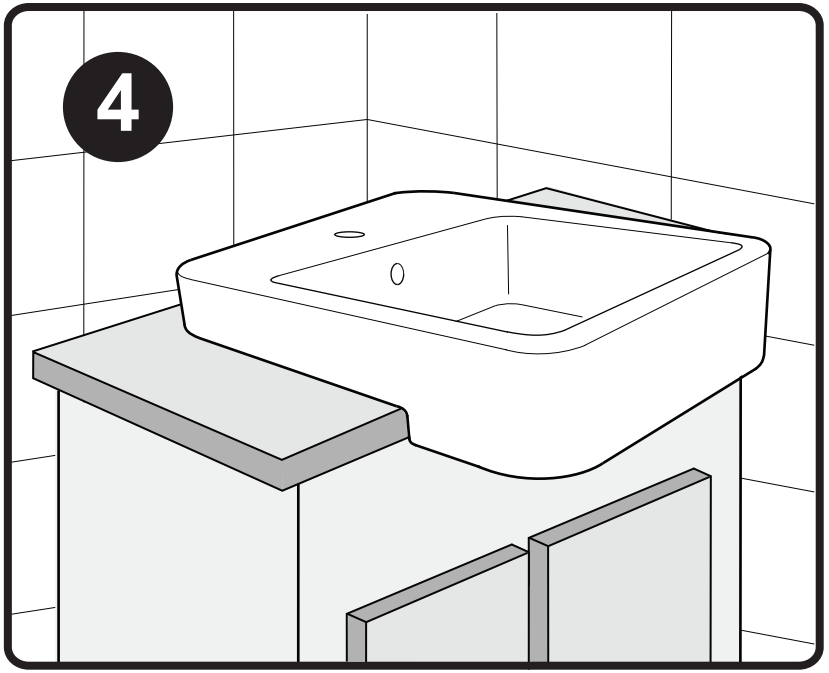
nahm